Limit value switches in a modular system standard, with PG 7 cable gland

Low-action and snap-action contact
single change-over contact (SPDT)

DN 100

Type code

Type **S- 3**
Low-action contact
without magnet holder

Type **Kombi S- 3**
Low-action contact
with magnet holder

Type **Kombi M- 3**
Snap-action contact
with screwed-in magnets

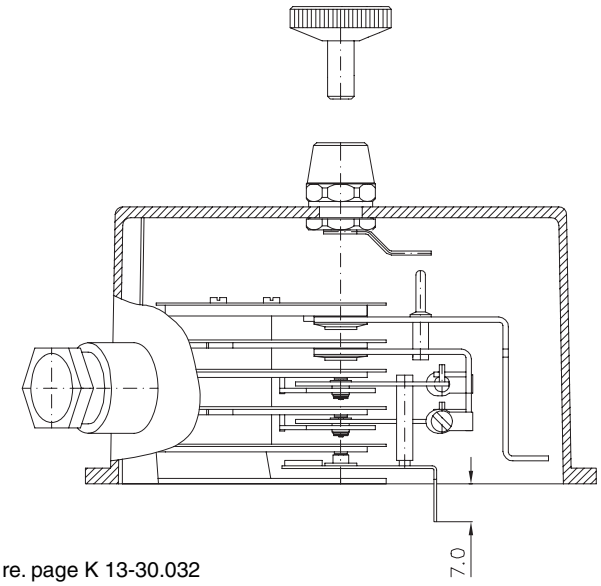

Dimensions re. page K 13-30.032

Switching function
pointer moving clockwise

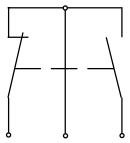

Mode of operation
Single change-over contacts (SPDT) are double contacts providing 2 switching functions, but are only equipped with 1 set pointer and 1 supporting arm. During the transition from one switching position to the other, the first contact is opened clockwise, and the second contact is then closed with a time lag.

Required order information

Nominal size	DN 100
Type	re. type code
Set pointer	TZ (contact fixed in the hood)
Execution	modular system standard
Connection (re. page K 14-10.030)	solder or plug terminal (German silver)
Hair spring (re. page K 14-20.010)	normal
	light
	strong
Contact material (re. page K 02-00.030)	silver nickel, gold-plated
	silver palladium
	silver palladium, gold-plated
	gold silver
	platinum iridium
Hood diameter	Art. No.: (re. schedule)

∅	Rim	Art. No.
98.5	3 mm	1000336
98.5	4 mm	1000337
105.9	3 mm	1000338
110.0	3 mm	1000339

Special executions available on request

Recommended amplifiers

If our **MSR 010** type switching amplifier is used, a single contact may take the place of the more expensive changer. The **MSR 010** already has **a potential free changer** in the output.

(re. catalogue group K 11)

Additional information

Description / technical data

	Page
General (modular system standard)	K 06-00.010
Low-action contacts	K 02-00.010
Snap-action contacts	K 02-00.020
Load table	K 14-10.010
Circuit diagrams / self-adhesive labels	K 14-10.020
Terminal configuration	K 14-10.031
Fitting, adjusting	K 14-10.040
Sealing and adapting rings	K 13-30.040
	K-group
Accessories	K 13
Limit value switches immersed in oil	K 07

07.2006 Errors excepted. Subject to alteration without notice.